60x45cm Combi-Microwave Oven

Modern Series

F457MODMWTX

This Bertazzoni Modern Series 60x45 cm combi microwave has 7 functions. It offers all the benefits of a multi-function electric oven and microwave oven in one. With two levels, it is big enough to cook for the whole family and features two technologies for the versatility of convection, regular or grill-heating modes. The microwave has five power levels and boost function to significantly reduce cooking times compared to a conventional oven. Controlled with a control knob and full touch TFT display. The door has a soft motion mechanism. Available in stainless steel, Carbonio, zinc and copper.

Guarda online

Specifications

Features

Compact oven features	
Special functions	defrost by time / defrost by weight
Size	60x45 cm
Microwave type	combi-microwave
Functions	convection / convection grill / grill / microonde combinato / microwave / microwave with grill
Total volume	38 L
Oven controls	touch TFT display
Auto cooking modes	15 preset
Inner oven door	double
Cavity finishing	stainless steel
Oven levels	2
Door hinges	soft-motion
Oven handle	glass finishing
Wire-shelves	1
Tray	1 glazen
Oven lights	single
Turntable quantity	1 glass
Technical specifications	
Energy class	A
Voltage and frequency	220/240 V - 50/60 Hz
Absorbed power (W)	3400 W
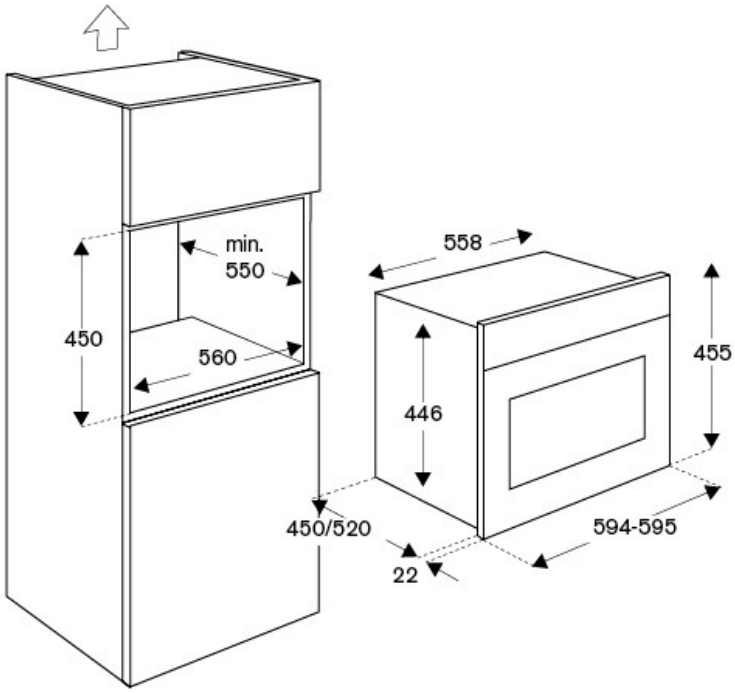
Dimensions